SUSPENSION, FRONT SHOCK MOUNTING - Z26NEY99A4/B4/A6/B6 (C750916)

2026 RZR - RZR XP S 1000 ULTIMATE (R01) - Z26NEY99A4/B4/A6/B6

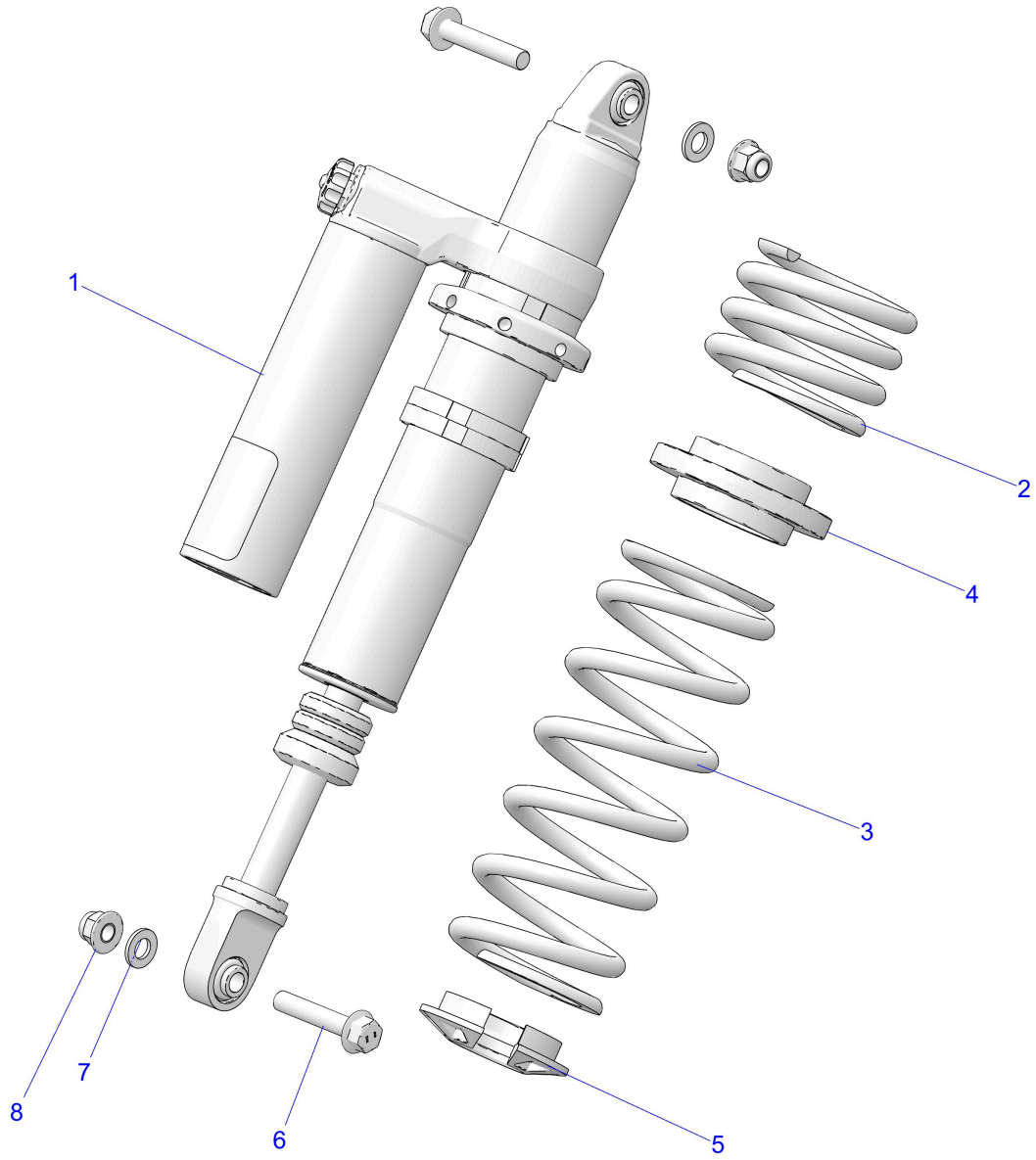

© 2025 Polaris Industries Inc. C750916

Reference #	*Part#*	*Description*	*Quantity*
1	7046371	SHOCK-FRONT,LH	1
1	7046372	SHOCK-FRONT,RH	1
2	7046375-831	SPR-3756.95FL 3.04-3.04ID,BRZ	2
3	7046376-831	SPR-250 12.375FL3.04-3.04ID,BZ	2
4	5858640	SPACER-SPRING,2.5"	2
5	1501211	RETAINER-SPRING,2.5"	2
6	7521334-65	SCR-HXFL-M12X1.75X65 10.9 ZFB	4
7	7557236	WSHR-FLAT-M12X2.5 ZTB	4
8	7548030	NUT-HXFL-M12X1.75 8 ZTB NYL	4

Copyright 1996-2026 Polaris Industries U.S.A All rights reserved.